TEST REPORT

Reference No.	:	WTX24X09216746W001
FCC ID	:	2AHZ5-KKSER
Applicant	:	Shenzhen Huafurui Technology Co., Ltd.
Address	:	Unit 601-03, 6/F, Block A, Building 1, Ganfeng Technology Building, No. 993 Jiaxian Road, Shenzhen
Manufacturer	:	The same as Applicant
Address	:	The same as Applicant
Product Name	:	Smartphone
Model No.	:	KINGKONG X
Standards	:	FCC Part 22, FCC Part 27
Date of Receipt sample	:	2024-09-14
Date of Test	:	2024-09-14 to 2024-11-11
Date of Issue	:	2024-11-11
Test Report Form No.	:	WTX_Part 22_Part 27W
Test Result	:	**Pass**

Remarks:

The results shown in this test report refer only to the sample(s) tested, this test report cannot be reproduced, except in full, without prior written permission of the company. The report would be invalid without specific stamp of test institute and the signatures of approver.

Prepared By:

Waltek Testing Group (Shenzhen) Co., Ltd.

Address: 1/F., Room 101, Building 1, Honghui Industrial Park, Liuxian 2nd Road, Block 70 Bao'an District, Shenzhen, Guangdong, China

Tel.: +86-755-33663308 Fax.: +86-755-33663309 Email: sem@waltek.com.cn

Tested by:

Mike Shi

Approved by:

Jason Su

TABLE OF CONTENTS

1. GENERAL INFORMATION 4
1.1 PRODUCT DESCRIPTION FOR EQUIPMENT UNDER TEST (EUT) 4
1.2 TEST STANDARDS 6
1.3 TEST METHODOLOGY 6
1.4 TEST FACILITY 6
1.5 EUT SETUP AND TEST MODE 7
1.6 MEASUREMENT UNCERTAINTY 8
1.7 TEST EQUIPMENT LIST AND DETAILS 9
2. SUMMARY OF TEST RESULTS 12
3. RF OUTPUT POWER 13
3.1 STANDARD APPLICABLE 13
3.2 TEST PROCEDURE 13
3.3 SUMMARY OF TEST RESULTS/PLOTS 13
4. PEAK-TO-AVERAGE RATIO (PAR) OF TRANSMITTER 18
4.1 STANDARD APPLICABLE 18
4.2 TEST PROCEDURE 18
4.3 SUMMARY OF TEST RESULTS 18
5. EMISSION BANDWIDTH 19
5.1 STANDARD APPLICABLE 19
5.2 TEST PROCEDURE 19
5.3 SUMMARY OF TEST RESULTS/PLOTS 19
6. OUT OF BAND EMISSIONS AT ANTENNA TERMINAL 20
6.1 STANDARD APPLICABLE 20
6.2 TEST PROCEDURE 20
6.3 SUMMARY OF TEST RESULTS/PLOTS 21
7. SPURIOUS RADIATED EMISSIONS 22
7.1 STANDARD APPLICABLE 22
7.2 TEST PROCEDURE 22
7.3 SUMMARY OF TEST RESULTS/PLOTS 22
8. FREQUENCY STABILITY 29
8.1 STANDARD APPLICABLE 29
8.2 TEST PROCEDURE 29
8.3 SUMMARY OF TEST RESULTS/PLOTS 29
APPENDIX PHOTOGRAPHS 30

Report version

Version No.	Date of issue	Description
Rev.00	2024-11-11	Original
/	/	/

1. GENERAL INFORMATION

1.1 Product Description for Equipment Under Test (EUT)

General Description of EUT:	
Product Name:	Smartphone
Trade Name:	CUBOT
Model No.:	KINGKONG X
Adding Model(s):	KINGKONG ACE 2, KINGKONG ACE 3, KINGKONG AX, KINGKONG ES, KINGKONG POWER 3, KINGKONG STAR 2, KINGKONG X PRO
Rated Voltage:	DC3.87V
Battery:	10200mAh
Adapter Model:	Model:HJ-PD33W-US Input:100-240v~50/60Hz 0.8A Output:DC5V3.0A 15.0W OR DC9.0V3.0A 27.0W OR DC12.0V2.75A 33.0W MAX
Hardware Version:	G2365-MUB-V2-BOM3
Software Version:	CUBOT_KINGKONG X_E021C_V21
Note: The test data is gathered from a production sample, provided by the manufacturer. The appearance of others models listed in the report is different from main-test model KINGKONG X, but the circuit and the electronic construction do not change, declared by the manufacturer.	

Technical Characteristics of EUT:	
5G	
Support Networks:	5G NR
Support Band:	n5,n41
Uplink Frequency:	5G NR n5: 824-849MHz, 5G NR n41: 2496-2690MHz,
Downlink Frequency:	5G NR n5: 869-894MHz, 5G NR n41: 2496-2690MHz,
RF Output Power:	5G NR n5: 24.04dBm, 5G NR n41: 25.99dBm,
Type of Emission:	5G NR n5: 17M9G7D, 17M9W7D 5G NR n41:96M3G7D, 96M3W7D
Type of Modulation:	DFT-s-OFDM: PI/2 BPSK QPSK / 16QAM / 64QAM / 256QAM CP-OFDM: QPSK / 16QAM / 64QAM / 256QAM
Antenna Type:	FPC Antenna
Antenna Gain:	5G N5: -2.9dBi 5G N41: 0.0dBi
Note The Antenna Gain is provided by the customer and can affect the validity of results.	

5G NR	SCS(kHz)	SA Powers (PCC)	NSA Powers(PC)	Bandwidths
N5	15	3	/	5, 10, 15, 20
N41	30	2	/	10, 15, 20, 40, 50, 60, 80, 90, 100

1.2 Test Standards

The tests were performed according to following standards:

FCC Rules Part 2: Frequency Alloca-Tions and Radio Treaty Mat-Ters; General Rules and Reg-Ulations.
FCC Rules Part 22: Private Land Mobile Radio Services.
FCC Rules Part 27: Miscellaneous Wireless Communications Services.
TIA/EIA 603 E March 2016: Land Mobile FM or PM Communications Equipment Measurement and Performance Standards.
ANSI C63.26-2015: American National Standard for Compliance Testing of Transmitters Used in Licensed Radio Services.
KDB 971168 D01 Power Meas License Digital Systems v03r01: Measurement Guidance for Certification of Licensed Digital Transmitters.

Maintenance of compliance is the responsibility of the manufacturer. Any modification of the product, which result in lowering the emission, should be checked to ensure compliance has been maintained.

1.3 Test Methodology

All measurements contained in this report were conducted with TIA/EIA 603 E/ KDB 971168/ ANSI C63.26
The equipment under test (EUT) was configured to measure its highest possible emission level. The test modes were adapted accordingly in reference to the Operating Instructions.

1.4 Test Facility

Address of the test laboratory
Laboratory: Waltek Testing Group (Shenzhen) Co., Ltd.
Address: 1/F., Room 101, Building 1, Hongwei Industrial Park, Liuxian 2nd Road, Block 70 Bao'an District, Shenzhen, Guangdong, China

FCC – Registration No.: 125990
Waltek Testing Group (Shenzhen) Co., Ltd. EMC Laboratory has been registered and fully described in a report filed with the FCC (Federal Communications Commission). The acceptance letter from the FCC is mai ntained in our files. The Designation Number is CN5010, and Test Firm Registration Number is 125990.

Industry Canada (IC) Registration No.: 11464A
The 3m Semi-anechoic chamber of Waltek Testing Group (Shenzhen) Co., Ltd. has been registered by Certification and Engineering Bureau of Industry Canada for radio equipment testing with Registration No.: 11464A and the CAB identifier is CN0057.

1.5 EUT Setup and Test Mode

The EUT was operated in the engineering mode to fix the Tx frequency that was for the purpose of the measurements. All testing shall be performed under maximum output power condition, and to measure its highest possible emissions level, more detailed description as follows:

Test Mode List		
Test Mode	Description	Remark
TM1	5G NR n5(SCS:15 kHz)	Low, Middle, High Channels
TM2	5G NR n41(SCS:30 kHz)	Low, Middle, High Channels

Test Conditions	
Temperature:	22~25 °C
Relative Humidity:	45~75 %
ATM Pressure:	1019 mbar

EUT Cable List and Details			
Cable Description	Length (m)	Shielded/Unshielded	With / Without Ferrite
Type-C Cable	1.0	Shielded	With Ferrite

Special Cable List and Details			
Cable Description	Length (m)	Shielded/Unshielded	With / Without Ferrite
/	/	/	/

Auxiliary Equipment List and Details			
Description	Manufacturer	Model	Serial Number
/	/	/	/

1.6 Measurement Uncertainty

Measurement uncertainty		
Parameter	Conditions	Uncertainty
RF Output Power	Conducted	±0.42dB
Occupied Bandwidth	Conducted	±1.5%
Frequency Stability	Conducted	2.3%
Transmitter Spurious Emissions	Conducted	±0.42dB
Transmitter Spurious Emissions	Radiated	30-200MHz ±4.52dB
		0.2-1GHz ±5.56dB
		1-6GHz ±3.84dB
		6-18GHz ±3.92dB

1.7 Test Equipment List and Details

Fixed asset Number	Description	Manufacturer	Model	Serial No.	Cal Date	Due. Date
WTXE1041A1001	Communication Tester	Rohde & Schwarz	CMW500	148650	2024-02-24	2025-02-23
WTXE1022A1002	GSM Tester	Rohde & Schwarz	CMU200	114403	2024-02-27	2025-02-26
WTXE1091A1001	UXM 5G Wireless Test Platform	KEYSIGHT	E7515B	MY57450525	2024-02-27	2025-02-26
WTXE1005A1005	Spectrum Analyzer	Agilent	N9020A	US47140102	2024-03-19	2025-03-18
WTXE1084A1001	Spectrum Analyzer	Agilent	N9020A	MY54320548	2024-02-24	2025-02-23
WTXE1044A1001	Signal Generator	Agilent	83752A	3610A01453	2024-02-24	2025-02-23
WTXE1045A1001	Vector Signal Generator	Agilent	N5182A	MY47070202	2024-02-24	2025-02-23
WTXE1018A1001	Power Divider	Weinschel	1506A	PM204	2024-02-29	2025-02-28
WTXE1088A1001-2	EXA Signal Analyzer	KEYSIGHT	N9010B	MY59070494	2024-02-24	2025-02-23
WTXE1092A1001-2	Band Reject Filter Group	Tonscend	JS0806-F	2018060319	2024-03-23	2025-03-22
☐Chamber A: Below 1GHz						
WTXE1005A1003	Spectrum Analyzer	Rohde & Schwarz	FSP30	836079/035	2024-02-24	2025-02-23
WTXE1001A1001	EMI Test Receiver	Rohde & Schwarz	ESPI	101611	2024-03-19	2025-03-18
WTXE1007A1001	Amplifier	HP	8447F	2805A03475	2024-02-24	2025-02-23
WTXE1010A1007	Loop Antenna	Schwarz beck	FMZB 1516	9773	2024-02-26	2025-02-25
WTXE1010A1006	Broadband Antenna	Schwarz beck	VULB9163	9163-333	2024-02-24	2025-02-23
☐Chamber A: Above 1GHz						
WTXE1005A1003	Spectrum Analyzer	Rohde & Schwarz	FSP30	836079/035	2024-02-24	2025-02-23
WTXE1001A1001	EMI Test Receiver	Rohde & Schwarz	ESPI	101611	2024-03-19	2025-03-18
WTXE1065A	Amplifier	C&D	PAP-1G18	2002	2024-02-27	2025-02-26

1001						
WTXE1010A 1005	Horn Antenna	ETS	3117	00086197	2024-02-26	2025-02-25
WTXE1010A 1010	DRG Horn Antenna	A.H. SYSTEMS	SAS-574	571	2024-03-17	2025-03-16
WTXE1003A 1001	Pre-amplifier	Schwarzbeck	BBV 9721	9721-031	2024-02-29	2025-02-28
WTXE1004A 1-001	Spectrum Analyzer	Rohde & Schwarz	FSP40	100612	2024-02-27	2025-02-26
☐Chamber B:Below 1GHz						
WTXE1010A 1006	Trilog Broadband Antenna	Schwarz beck	VULB9163(B)	9163-635	2024-03-17	2027-03-16
WTXE1038A 1001	Amplifier	Agilent	8447D	2944A10457	2024-02-24	2025-02-23
WTXE1001A 1002	EMI Test Receiver	Rohde & Schwarz	ESPI	101391	2024-02-24	2025-02-23
☒Chamber C:Below 1GHz						
WTXE1093A 1001	EMI Test Receiver	Rohde & Schwarz	ESIB 26	100401	2024-02-27	2025-02-26
WTXE1010A 1013-1	Trilog Broadband Antenna	Schwarz beck	VULB 9168	1194	2024-04-18	2027-04-17
WTXE1007A 1002	Amplifier	HP	8447F	2944A03869	2024-02-24	2025-02-23
WTXE1010A 1007	Loop Antenna	Schwarz beck	FMZB 1516	9773	2024-02-26	2025-02-25
☒Chamber C: Above 1GHz						
WTXE1093A 1001	EMI Test Receiver	Rohde & Schwarz	ESIB 26	100401	2024-02-27	2025-02-26
WTXE1103A 1005	Horn Antenna	POAM	RTF-118A	1820	2023-03-10	2026-03-09
WTXE1103A 1006	Amplifier	Tonscend	TAP01018050	AP22E806235	2024-02-27	2025-02-26
WTXE1010A 1010	DRG Horn Antenna	A.H. SYSTEMS	SAS-574	571	2024-03-17	2025-03-16
WTXE1003A 1001	Pre-amplifier	Schwarzbeck	BBV 9721	9721-031	2024-02-29	2025-02-28

Software List			
Description	**Manufacturer**	**Model**	**Version**
EMI Test Software (Radiated Emission A)	Farad	EZ-EMC	RA-03A1 (1.1.4.2)
EMI Test Software (Radiated Emission B)	Farad	EZ-EMC	RA-03A1 (1.1.4.2)
EMI Test Software (Radiated Emission C)	Farad	EZ-EMC	RA-03A1-2 (1.1.4.2)
5G NR Test Ssystem	Tonscend	TS-1120	V2.4.0

*Remark: indicates software version used in the compliance certification testing.

2. SUMMARY OF TEST RESULTS

FCC Rules	Description of Test Item	Result
§22.913(a), §27.50(d)	RF Output Power	Compliant
§27.50	Peak-to-average Ratio (PAR) of Transmitter	Compliant
§22.917(b), §27.53	Emission Bandwidth	Compliant
§22.917(a), §27.53(h)	Spurious Emissions at Antenna Terminal	Compliant
§22.917(a), §27.53(h)	Spurious Radiation Emissions	Compliant
§2.917(a), §27.53(h)	Out of Band Emissions	Compliant
§22.355, §27.54	Frequency Stability	Compliant

3. RF Output Power

3.1 Standard Applicable

According to §22.913(a)(2), the ERP of mobile and portable stations transmitters and auxiliary test transmitters must not exceed 7 Watts.

According to §27.50(d)(4), fixed, mobile, and portable (hand-held) stations operating in the 1710-1755MHz band and mobile and portable stations operating in the 1695-1710MHz and 1755-1780MHz bands are limited to 1 watt EIRP.

According to §27.50(c)(10), portable stations (hand-held devices) in the 698-746 MHz band are limited to 3 watts ERP.

3.2 Test Procedure

- Conducted output power test method:

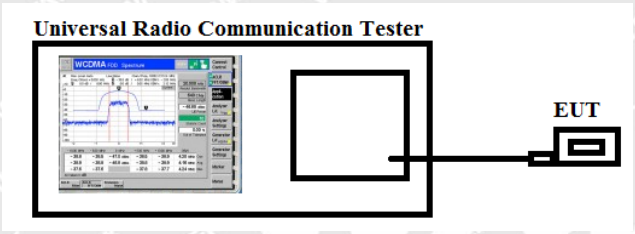

- Radiated power test method:

1. The setup of EUT is according with per ANSI/TIA Standard 603E and ANSI C63.26 measurement procedure.
2. The measurement antenna was placed at a distance of 3 meters from the EUT. During the tests, the antenna height and polarization as well as EUT azimuth were varied in order to identify the maximum level of emissions from the EUT. The test was performed by placing the EUT on 3-orthogonal axis.
3. The frequency range up to tenth harmonic of the fundamental frequency was investigated.

4. Remove the EUT and replace it with substitution antenna. A signal generator was connected to the substitution antenna by a non-radiating cable. The absolute levels of the spurious emissions were measured by the substitution.

3.3 Summary of Test Results/Plots

Max. Radiated Power:

5G NR n5

Channel Bandwidth: 5MHz			
Modulation	Channel	E.r.p [dBm]	Verdict
DFT-QPSK	LCH	20.42	PASS
	MCH	20.33	PASS
	HCH	19.79	PASS
CP-QPSK	LCH	19.96	PASS
	MCH	19.75	PASS
	HCH	20.03	PASS
Channel Bandwidth: 10MHz			
Modulation	Channel	E.r.p [dBm]	Verdict
DFT-QPSK	LCH	19.98	PASS
	MCH	20.51	PASS
	HCH	19.88	PASS
CP-QPSK	LCH	19.73	PASS
	MCH	19.99	PASS
	HCH	20.13	PASS
Channel Bandwidth: 15MHz			
Modulation	Channel	E.r.p [dBm]	Verdict
DFT-QPSK	LCH	20.11	PASS
	MCH	20.27	PASS
	HCH	20.13	PASS
CP-QPSK	LCH	20.16	PASS
	MCH	20.06	PASS
	HCH	20.08	PASS
Channel Bandwidth: 20MHz			
Modulation	Channel	E.r.p [dBm]	Verdict
DFT-QPSK	LCH	20.34	PASS
	MCH	20.60	PASS
	HCH	20.26	PASS
CP-QPSK	LCH	19.87	PASS
	MCH	19.68	PASS
	HCH	20.18	PASS

5G NR n41

Channel Bandwidth: 10MHz			
Modulation	Channel	E.i.r.p [dBm]	Verdict
DFT-QPSK	LCH	24.98	PASS
	MCH	25.47	PASS
	HCH	25.13	PASS
CP-QPSK	LCH	24.98	PASS
	MCH	25.04	PASS
	HCH	25.08	PASS
Channel Bandwidth: 15MHz			
Modulation	Channel	E.i.r.p [dBm]	Verdict
DFT-QPSK	LCH	25.38	PASS
	MCH	25.37	PASS
	HCH	25.14	PASS
CP-QPSK	LCH	24.97	PASS
	MCH	24.99	PASS
	HCH	24.78	PASS
Channel Bandwidth: 20MHz			
Modulation	Channel	E.i.r.p [dBm]	Verdict
DFT-QPSK	LCH	25.22	PASS
	MCH	25.51	PASS
	HCH	25.03	PASS
CP-QPSK	LCH	24.90	PASS
	MCH	24.92	PASS
	HCH	25.07	PASS
Channel Bandwidth: 40MHz			
Modulation	Channel	E.i.r.p [dBm]	Verdict
DFT-QPSK	LCH	25.28	PASS
	MCH	25.41	PASS
	HCH	25.21	PASS
CP-QPSK	LCH	24.88	PASS
	MCH	24.87	PASS
	HCH	25.02	PASS

Channel Bandwidth: 50MHz			
Modulation	Channel	E.i.r.p [dBm]	Verdict
DFT-QPSK	LCH	25.18	PASS
	MCH	25.43	PASS
	HCH	25.06	PASS
CP-QPSK	LCH	24.93	PASS
	MCH	24.81	PASS
	HCH	25.23	PASS
Channel Bandwidth: 60MHz			
Modulation	Channel	E.i.r.p [dBm]	Verdict
DFT-QPSK	LCH	25.22	PASS
	MCH	25.24	PASS
	HCH	24.97	PASS
CP-QPSK	LCH	25.12	PASS
	MCH	24.75	PASS
	HCH	25.17	PASS
Channel Bandwidth: 80MHz			
Modulation	Channel	E.i.r.p [dBm]	Verdict
DFT-QPSK	LCH	25.09	PASS
	MCH	25.56	PASS
	HCH	25.02	PASS
CP-QPSK	LCH	24.71	PASS
	MCH	24.99	PASS
	HCH	24.91	PASS
Channel Bandwidth: 90MHz			
Modulation	Channel	E.i.r.p [dBm]	Verdict
DFT-QPSK	LCH	25.64	PASS
	MCH	24.46	PASS
	HCH	25.54	PASS
CP-QPSK	LCH	24.84	PASS
	MCH	26.02	PASS
	HCH	25.68	PASS

Channel Bandwidth: 100MHz			
Modulation	Channel	E.i.r.p [dBm]	Verdict
DFT-QPSK	LCH	25.64	PASS
	MCH	24.62	PASS
	HCH	25.84	PASS
CP-QPSK	LCH	24.85	PASS
	MCH	26.12	PASS
	HCH	25.58	PASS

Max. Conducted Output Power

Please refer to Appendix A: Average Power Output Data
Test result: Pass

4. Peak-to-average Ratio (PAR) of Transmitter

4.1 Standard Applicable

According to §27.50(B), the peak-to-average power ratio (PAPR) of the transmitter output power must not exceed 13dB. The PAPR measurements should be made using either an instrument with complementary cumulative distribution function (CCDF) capabilities to determine that PAPR will not exceed 13dB for more than 0.1 percent of the time or other Commission approved procedure. The measurement must be performed using a signal corresponding to the highest PAPR expected during periods of continuous transmission.

4.2 Test Procedure

According with KDB 971168

1. The signal analyzer' s CCDF measurement profile is enabled.
2. Frequency = carrier center frequency.
3. Measurement BW > Emission bandwidth of signal.
4. The signal analyzer was set to collect one million samples to generate the CCDF curve.
5. The measurement interval was set depending on the type of signal analyzed. For continuous signals (>98% duty cycle), the measurement interval was set to 1ms. For burst transmissions, the spectrum analyzer is set to use an internal " RF Burst" trigger that is synced with an incoming pulse and the measurement interval is set to less than the duration of the " on time" of one burst to ensure that energy is only captured during a time in which the transmitter is operating at maximum power.

Test Configuration for the emission bandwidth testing:

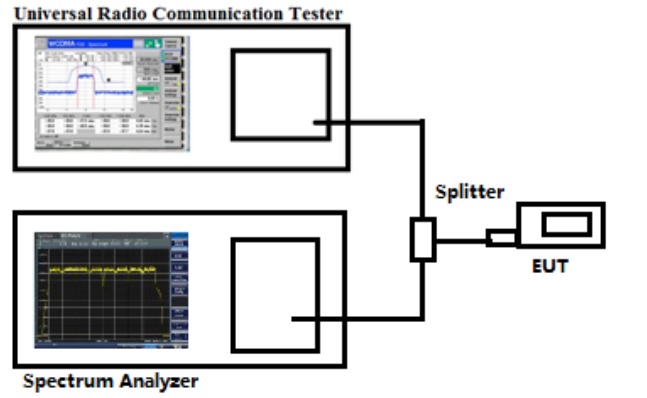

4.3 Summary of Test Results

Please refer to Appendix B: Peak-to-Average Ratio
Test result: Pass

5. Emission Bandwidth

5.1 Standard Applicable

According to §22.917(b), the emission bandwidth is defined as the width of the signal between two points, one below the carrier center frequency and one above the carrier center frequency, outside of which all emissions are attenuated at least 26dB below the transmitter power.

According to §27.53, the emission bandwidth is defined as the width of the signal between two points, one below the carrier center frequency and one above the carrier center frequency, outside of which all emissions are attenuated at least 26dB below the transmitter power.

5.2 Test Procedure

According to §22.917(b), the emission bandwidth is defined as the width of the signal between two points, one below the carrier center frequency and one above the carrier center frequency, outside of which all emissions are attenuated at least 26dB below the transmitter power.

Test Configuration for the emission bandwidth testing:

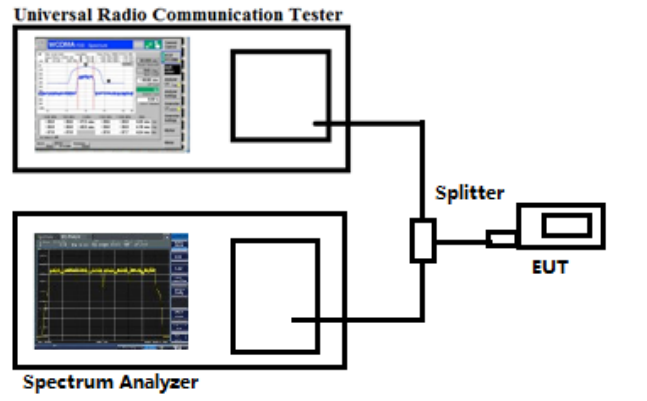

5.3 Summary of Test Results/Plots

Please refer to Appendix C: 26dB Bandwidth and Occupied Bandwidth

Test result: Pass

6. Out of Band Emissions at Antenna Terminal

6.1 Standard Applicable

According to §22.917(a), the power of any emissions outside of the authorized operating frequency ranges must be attenuated below the transmitting power (P) by a factor of at least 43 + 10 log(P) dB.

According to §27.53(h), the power of any emission outside a licensee's frequency block shall be attenuated below the transmitter power (P) in watts by at least 43 + 10 log10 (P) dB.

According to §27.53(g), for operations in the 600 MHz band and the 698-746 MHz band, the power of any emission outside a licensee's frequency band(s) of operation shall be attenuated below the transmitter power (P) within the licensed band(s) of operation, measured in watts, by at least 43 + 10 log (P) dB.

According to §27.53(m)(4), for mobile digital stations, the attenuation factor shall be not less than 40 + 10 log (P) dB on all frequencies between the channel edge and 5 megahertz from the channel edge, 43 + 10 log (P) dB on all frequencies between 5 megahertz and X megahertz from the channel edge, and 55 + 10 log (P) dB on all frequencies more than X megahertz from the channel edge, where X is the greater of 6 megahertz or the actual emission bandwidth as defined in paragraph (m)(6) of this section. In addition, the attenuation factor shall not be less that 43 + 10 log (P) dB on all frequencies between 2490.5MHz and 2496 MHz and 55 + 10 log (P) dB at or below 2490.5MHz.

6.2 Test Procedure

The RF output terminal of the transmitter was connected to the input of the spectrum analyzer via a suitable attenuation. The RBW of the spectrum analyzer was set to 100kHz and 1MHz for the scan frequency from 30MHz to 1GHz and the scan frequency from 1GHz to up to 10th harmonic.

Test Configuration for the out of band emissions testing:

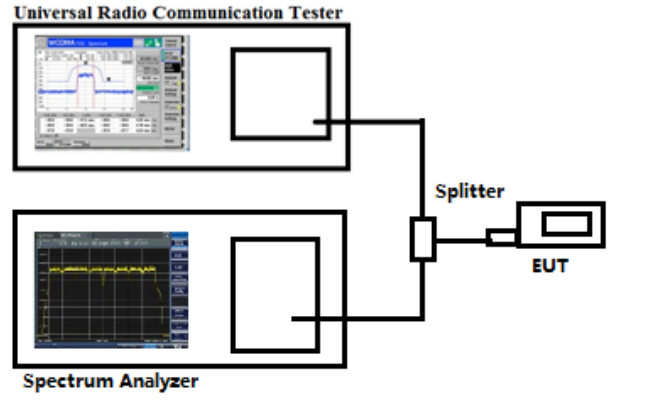

6.3 Summary of Test Results/Plots

Please refer to Appendix D & E: Band Edge & Conducted Spurious Emission

Test result: Pass

7. Spurious Radiated Emissions

7.1 Standard Applicable

According to §22.917(a), the power of any emissions outside of the authorized operating frequency ranges must be attenuated below the transmitting power (P) by a factor of at least 43 + 10 log(P) dB.

According to §27.53(h), the power of any emission outside a licensee's frequency block shall be attenuated below the transmitter power (P) in watts by at least 43 + 10 log10 (P) dB.

According to §27.53(g) the power of any emission outside a licensee's frequency band(s) of operation shall be attenuated below the transmitter power (P) within the licensed band(s) of operation, measured in watts, by at least 43 + 10 log (P) dB.

7.2 Test Procedure

1. The setup of EUT is according with per ANSI/TIA-603-E and ANSI C63.4-2014 measurement procedure.
2. The measurement antenna was placed at a distance of 3 meters from the EUT. During the tests, the antenna height and polarization as well as EUT azimuth were varied in order to identify the maximum level of emissions from the EUT. The test was performed by placing the EUT on 3-orthogonal axis.
3. The frequency range up to tenth harmonic of the fundamental frequency was investigated.
4. Remove the EUT and replace it with substitution antenna. A signal generator was connected to the substitution antenna by a non-radiating cable. The absolute levels of the spurious emissions were measured by the substitution.

Spurious attenuation limit in dB =43+10 Log_{10} (power out in Watts)

7.3 Summary of Test Results/Plots

Note: 1. this EUT was tested in 3 orthogonal positions and the worst case position data was reported.

2. All test modes (different bandwidth and different modulation) are performed, but only the worst case is recorded in this report.

➢ Spurious Emissions Below 1GHz

Test Mode	5G NR n5	Polarity:	Horizontal

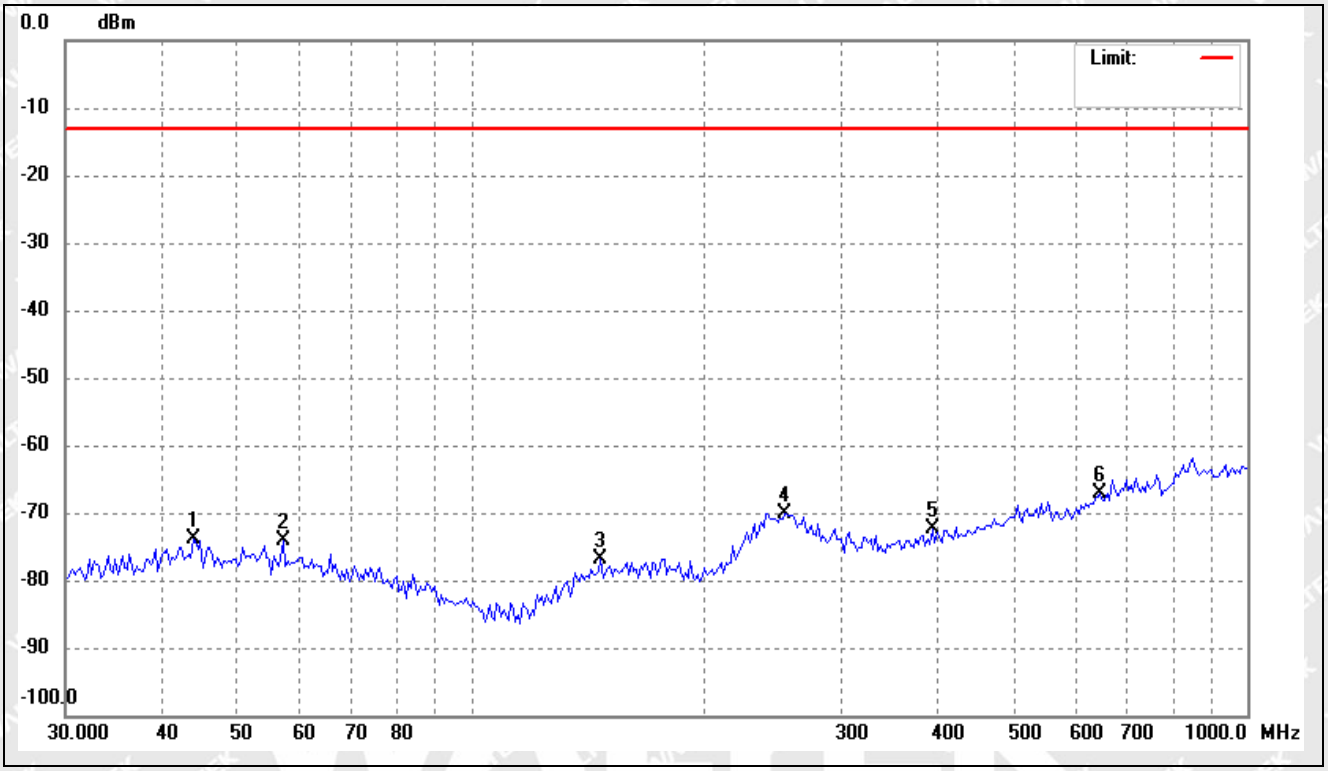

No.	Frequency	Reading	Correct	Result	Limit	Margin	Remark
	(MHz)	(dBm)	dB	(dBm)	(dBm)	(dB)	
1	43.8452	-76.82	2.92	-73.90	-13.00	-60.90	ERP
2	57.2654	-76.83	2.62	-74.21	-13.00	-61.21	ERP
3	146.8392	-77.49	0.50	-76.99	-13.00	-63.99	ERP
4	254.0312	-78.25	8.21	-70.04	-13.00	-57.04	ERP
5	392.7376	-77.06	4.62	-72.44	-13.00	-59.44	ERP
6	646.8217	-76.60	9.50	-67.10	-13.00	-54.10	ERP

Test Mode	5G NR n5	Polarity:	Vertical

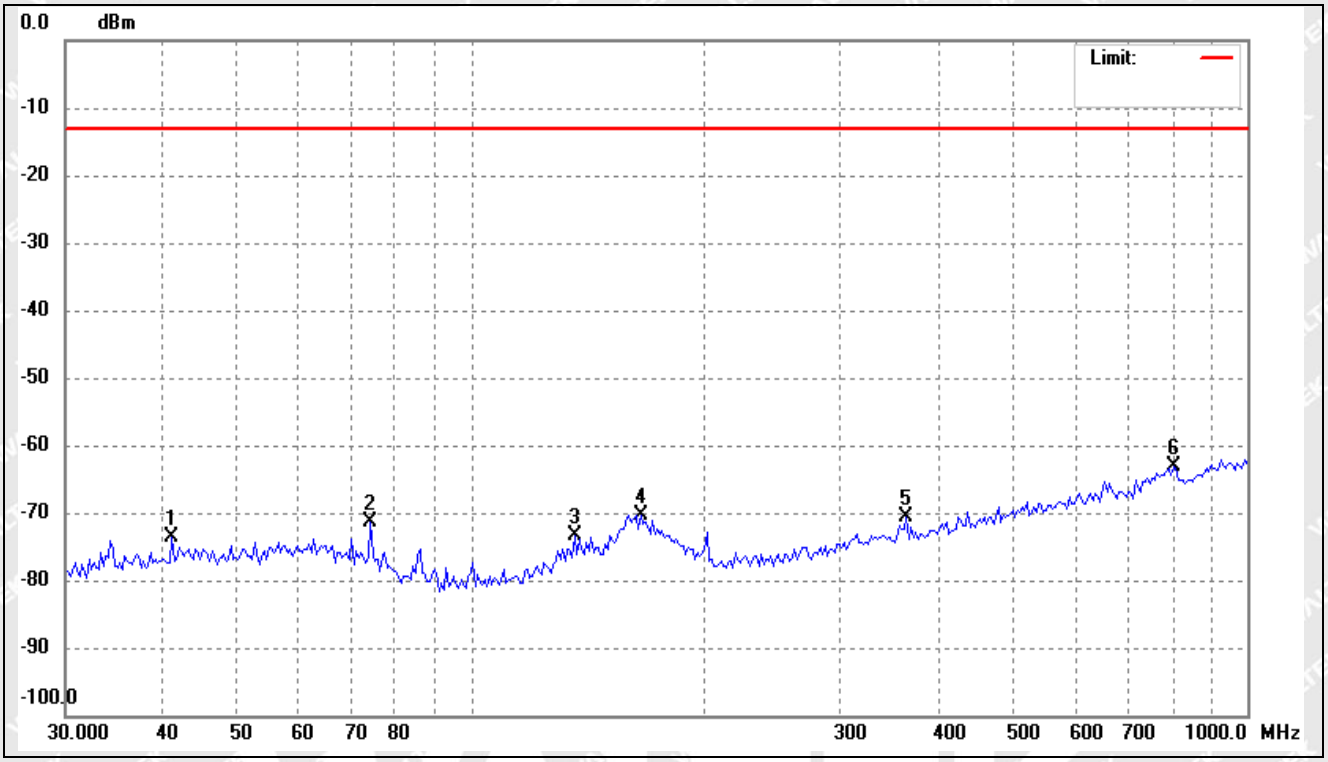

No.	Frequency	Reading	Correct	Result	Limit	Margin	Remark
	(MHz)	(dBm)	dB	(dBm)	(dBm)	(dB)	
1	41.1581	-76.27	2.66	-73.61	-13.00	-60.61	ERP
2	74.2696	-73.28	1.94	-71.34	-13.00	-58.34	ERP
3	135.9163	-75.99	2.73	-73.26	-13.00	-60.26	ERP
4	165.4716	-77.21	6.96	-70.25	-13.00	-57.25	ERP
5	363.5231	-75.15	4.62	-70.53	-13.00	-57.53	ERP
6	804.2523	-75.67	12.43	-63.24	-13.00	-50.24	ERP

Test Mode	5G NR n41	Polarity:	Horizontal

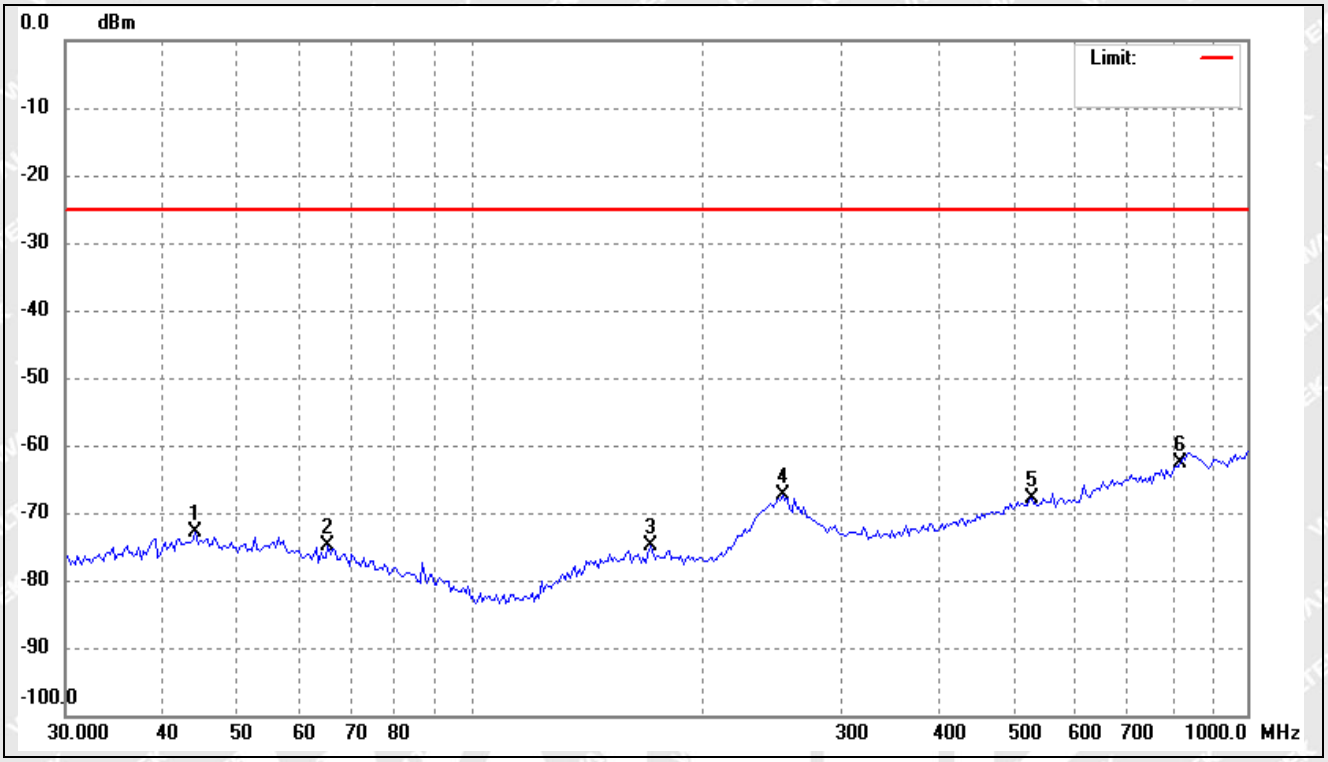

No.	Frequency	Reading	Correct	Result	Limit	Margin	Remark
	(MHz)	(dBm)	dB	(dBm)	(dBm)	(dB)	
1	44.1544	-75.84	2.94	-72.90	-25.00	-47.90	ERP
2	65.4452	-76.53	1.62	-74.91	-25.00	-49.91	ERP
3	170.1888	-75.92	0.98	-74.94	-25.00	-49.94	ERP
4	252.2523	-75.64	8.36	-67.28	-25.00	-42.28	ERP
5	527.5707	-75.47	7.54	-67.93	-25.00	-42.93	ERP
6	821.3871	-75.51	12.97	-62.54	-25.00	-37.54	ERP

Test Mode	5G NR n41	Polarity:	Vertical

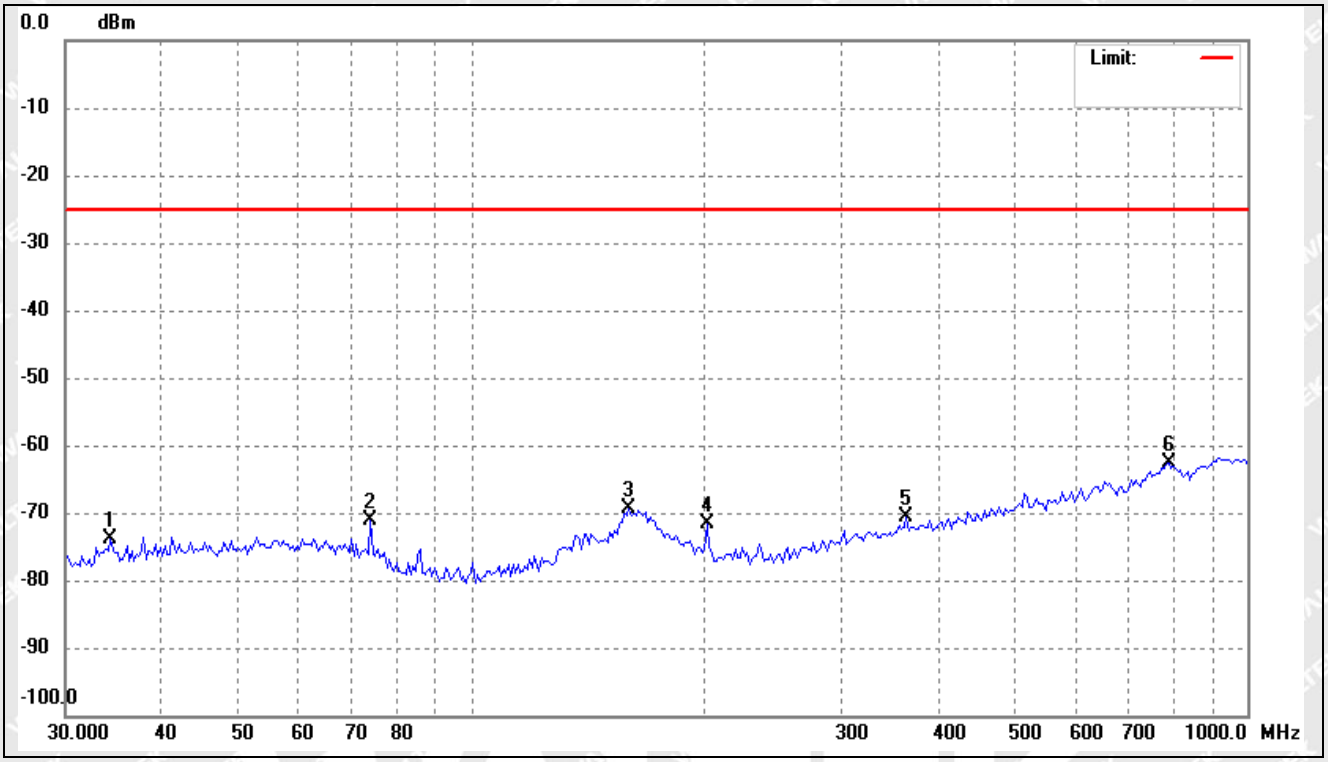

No.	Frequency	Reading	Correct	Result	Limit	Margin	Remark
	(MHz)	(dBm)	dB	(dBm)	(dBm)	(dB)	
1	34.2852	-75.96	2.01	-73.95	-25.00	-48.95	ERP
2	74.2696	-73.11	1.94	-71.17	-25.00	-46.17	ERP
3	159.7586	-77.11	7.83	-69.28	-25.00	-44.28	ERP
4	201.4539	-72.96	1.23	-71.73	-25.00	-46.73	ERP
5	363.5231	-75.15	4.62	-70.53	-25.00	-45.53	ERP
6	793.0281	-75.13	12.48	-62.65	-25.00	-37.65	ERP

Note: Margin= (Reading+ Correct)- Limit

➢ Spurious Emissions Above 1GHz

For 5G NR n5 Mode

Frequency	Result	Limit	Margin	Polar
(MHz)	(dBm)	(dBm)	(dB)	H/V
Low Channel (826.5MHz)				
1653.00	-31.03	-13	-18.03	H
2479.50	-37.03	-13	-24.03	H
1653.00	-31.92	-13	-18.92	V
2479.50	-32.50	-13	-19.50	V
Middle Channel (836.5MHz)				
1673.00	-33.39	-13	-20.39	H
2509.50	-37.31	-13	-24.31	H
1673.00	-33.48	-13	-20.48	V
2509.50	-31.90	-13	-18.90	V
High Channel (846.5MHz)				
1693.00	-30.99	-13	-17.99	H
2539.50	-35.40	-13	-22.40	H
1693.00	-30.99	-13	-17.99	V
2539.50	-32.42	-13	-19.42	V

For 5G NR n41 Mode

Frequency (MHz)	Result (dBm)	Limit (dBm)	Margin (dB)	Polar H/V
Low Channel (2506MHz)				
5012.00	-31.94	-25	-6.94	H
7518.00	-32.60	-25	-7.60	H
5012.00	-30.44	-25	-5.44	V
7518.00	-31.80	-25	-6.80	V
Middle Channel (2593MHz)				
5186.00	-32.07	-25	-7.07	H
7779.00	-33.54	-25	-8.54	H
5186.00	-31.48	-25	-6.48	V
7779.00	-34.15	-25	-9.15	V
High Channel (2680MHz)				
5360.00	-31.44	-25	-6.44	H
8040.00	-32.94	-25	-7.94	H
5360.00	-31.83	-25	-6.83	V
8040.00	-33.26	-25	-8.26	V

Note: Result=Reading+ Correct, Margin= Result- Limit

Note: Testing is carried out with frequency rang 9kHz to the tenth harmonics, other than listed in the table above are attenuated more than 20dB below the permissible limits or the field strength is too small to be measured.

8. Frequency Stability

8.1 Standard Applicable

According to §22.355 , §27.54 the limit is 2.5ppm.

8.2 Test Procedure

According to §2.1055, the following test procedure was performed.
The Frequency Stability is measured directly with a Frequency Domain Analyzer. Frequency Deviation in ppm is calculated from the measured peak to peak value.
The Carrier Frequency Stability over Power Supply Voltage and over Temperature is measured with a Frequency Domain Analyzer in histogram mode.

8.3 Summary of Test Results/Plots

Please refer to Appendix F: Frequency Stability

Test result: Pass

APPENDIX PHOTOGRAPHS

Please refer to “ANNEX”

******* END OF REPORT *******